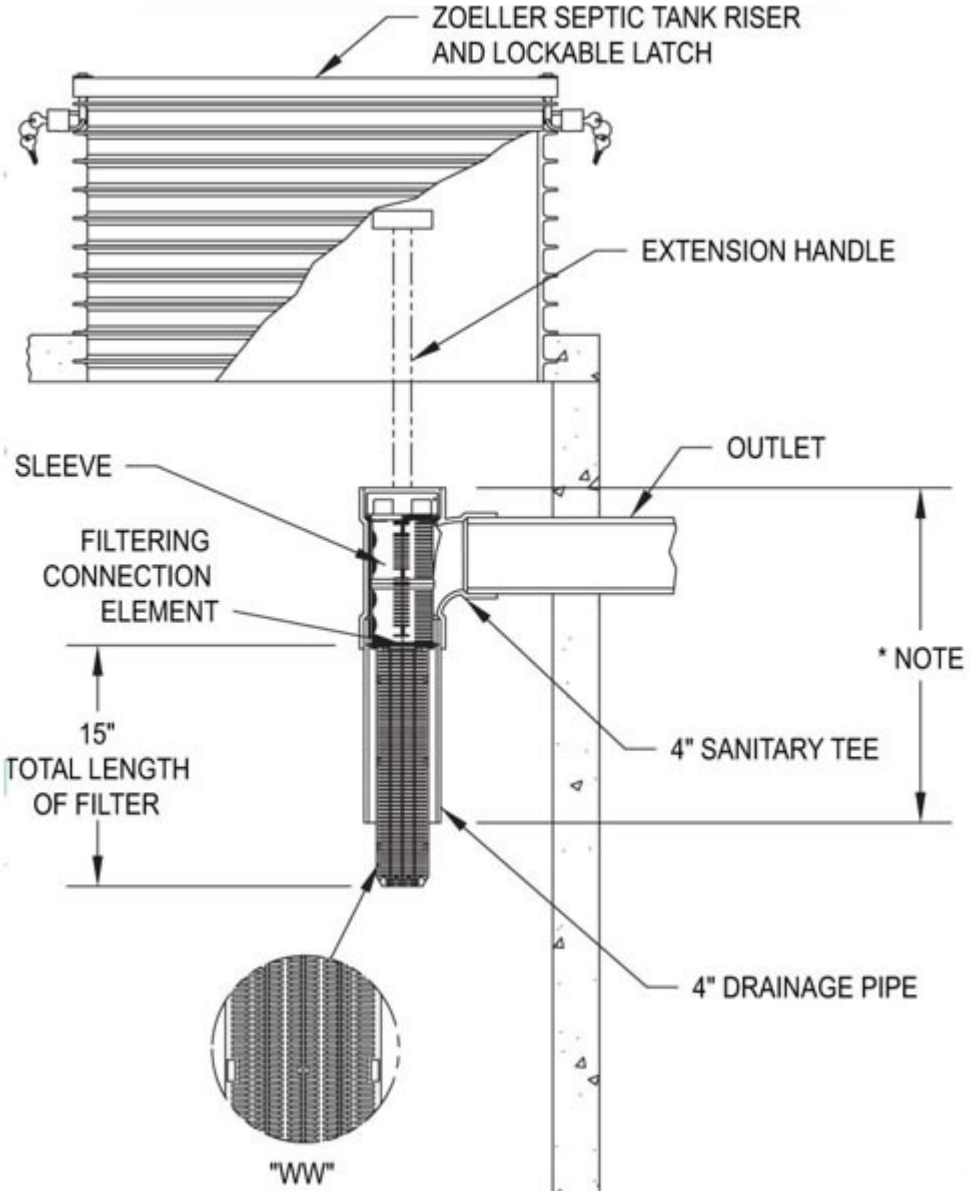
ZOELLER SEPTIC TANK RISER
AND LOCKABLE LATCH
EXTENSION HANDLE
OUTLET
SLEEVE
FILTERING
CONNECTION
ELEMENT
* NOTE
15"
TOTAL LENGTH
OF FILTER
4" SANITARY TEE
4" DRAINAGE PIPE
"WW"